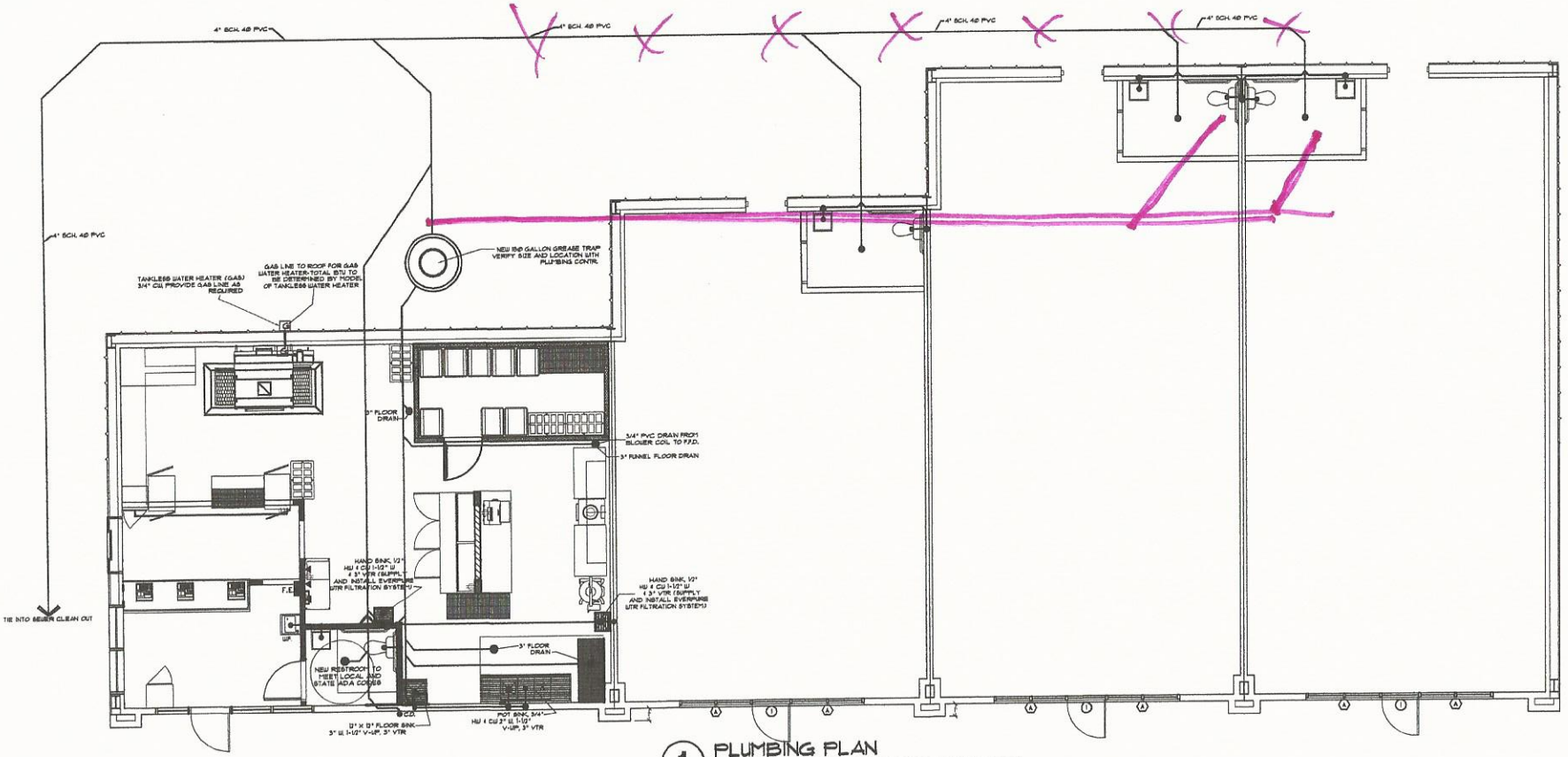

1 PLUMBING PLAN

SCALE: 1/4" = 1'-0"

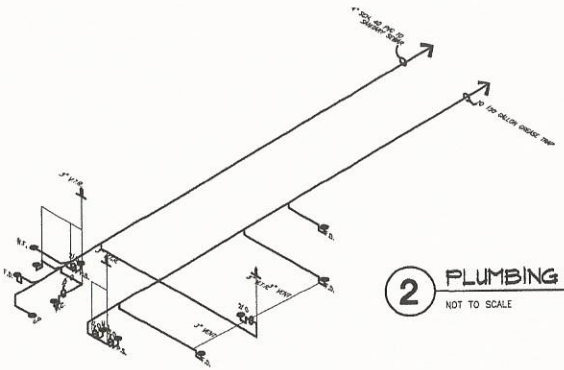

2 PLUMBING RISER DIAGRAM

NOT TO SCALE

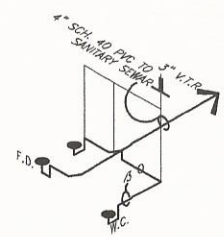

TYPICAL RISER FOR RESTROOM IN MANILA BUILDING

3 PLUMBING RISER DIAGRAM

NOT TO SCALE

Revisions
--

PERKINS ROAD RETAIL CENTER

PERKINS ROAD
BATON ROUGE, LOUISIANA

MARK MATTHEWS
AIA • ARCHITECT
11000 Cleverland Ct. • Baton Rouge, LA • 70809 • (225) 706-5011

Date
12-2-2013

Drawn
JPD

Checked
MPM

Job Number
--

Sheet
P1.0